CMOS CAMERA MODULES

your BEST camera module partner

JAL-MIPI-OV5640 V3.0

OmniVision OV5640 MIPI and DVP Parallel Interface Auto Focus 5MP Camera Module

Camera Module No.	JAL-MIPI-OV5640 V3.0
Image Sensor	OV5640
EFL	3.37 mm
F.NO	2.8
Pixel	2592 x 1944 (QSXGA)
View Angle	67.4°
Lens Type	1/4 inch
Lens Dimensions	8.5 x 8.5 x 4.9 mm
Module Size	100 x 8.5 mm
Module Type	Auto Focus
Interface	MIPI and DVP Parallel

Mating Connector Part No. AXK7L40223G
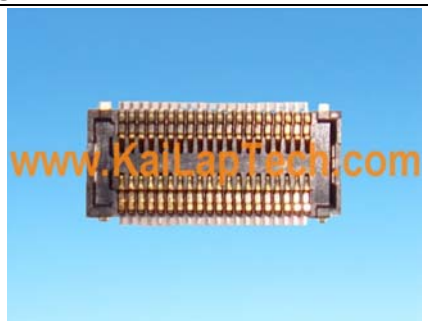
Mating Connector On Main Board. Sold Separately.

www.KaiLapTech.com sales@KaiLapTech.com Tel: (852) 6908 1256 Fax: (852) 3017 6778

All rights reserved @ Kai Lap Technologies Group Ltd. Specifications subject to change without notice.

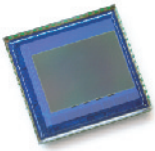

OV5640 5-megapixel product brief

1/4-inch, 5-Megapixel SOC Image Sensor Optimized for High-Volume Mobile Markets

lead free

available in a lead-free package

The OV5640 delivers a complete 5-megapixel camera solution on a single chip, aimed at offering cost efficiencies that serve the high-volume autofocus (AF) camera phone market. The system-on-a-chip (SOC) sensor features OmniVision's 1.4 micron OmniBSI™ backside illumination architecture to deliver excellent pixel performance and best-in-class low-light sensitivity, while enabling ultra compact camera module designs of 8.5 mm x 8.5 mm with <6 mm z-height. The OV5640 provides the full functionality of a complete camera, including anti-shake technology, AF control, and MIPI while being easier to tune then two-chip solutions, making it an ideal choice in terms of cost, time-to-market and ease of platform integration.

The OV5640 enables 720p HD video at 60 frames per second (fps) and 1080p HD video at 30 fps with complete user control over formatting and output data transfer. The 720p/60 HD video is captured in full field of view (FOV) with 2 x 2 binning, which doubles the sensitivity and improves the signal-to-noise ratio (SNR). Additionally, a unique post-binning re-sampling filter function removes zigzag artifacts around slant edges and minimizes spatial artifacts to deliver even sharper, crisper color images. To further improve camera performance and user experience, the OV5640 features an internal anti-shake engine for image stabilization, and it supports Scalado™ tagging for faster image preview and zoom.

The OV5640 offers a digital video port (DVP) parallel interface and a high-speed dual lane MIPI interface, supporting multiple output formats. An integrated JPEG compression engine simplifies data transfer for bandwidth-limited interfaces. The sensor's automatic image control functions include automatic exposure control (AEC), automatic white balance (AWB), automatic band filter (ABF), 50/60 Hz automatic luminance detection, and automatic black level calibration (ABLC). The OV5640 delivers programmable controls for frame rate, AEC/AGC 16-zone size/position/weight control, mirror and flip, cropping, windowing, and panning. It also offers color saturation, hue, gamma, sharpness (edge enhancement), lens correction, defective pixel canceling, and noise canceling to improve image quality.

Find out more at www.ovt.com.

OmniVision.

Camera Module Factory
www.KailapTech.com

OV5640

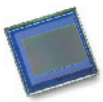

Applications

- Mobile Phones
- Digital Still and Video Cameras
- Entertainment

Ordering Information

- **OV05640-A71A**
  (color, lead-free, 71-pin CSP3)
- **OV05640-G04A**
  (color, chip probing, 200 µm backgrinding, reconstructed wafer)

Product Features

- 1.4 µm x 1.4 µm pixel with OmniBSI technology for high performance (high sensitivity, low crosstalk, low noise, improved quantum efficiency)
- optical size of 1/4"
- automatic image control functions:
  - automatic exposure control (AEC)
  - automatic white balance (AWB)
  - automatic band filter (ABF)
  - automatic 50/60 Hz luminance detection
  - automatic black level calibration (ABLC)
- programmable controls for frame rate, AEC/AGC 16-zone size/position/ weight control, mirror and flip, cropping, windowing, and panning
- image quality controls: color saturation, hue, gamma, sharpness (edge enhancement), lens correction, defective pixel canceling, and noise canceling
- support for output formats: RAW RGB, RGB565/555/444, CCIR656, YUV422/420, YCbCr422, and compression
- support for LED and flash strobe mode
- support for internal and external frame synchronization for frame exposure mode
- support horizontal binning and vertical sub-sampling
- support horizontal binning and vertical sub-sampling
- post binning resampling filter to minimize spatial/aliasing artifacts on 2x2 binned image
- embedded JPEG compression
- support for anti-shake
- digital video port (DVP) parallel output interface and dual lane MIPI output interface
- embedded 1.5V regulator for core power
- programmable I/O drive capability, I/O tri-state configurability
- support for black sun cancellation
- embedded arbitrary scalar supporting any size from 5 MP and below
- auto focus control (AFC) with embedded AF VCM driver
- embedded microcontroller
- suitable for module size of 8.5 x 8.5 x <6mm with both CSP and RW packaging

Product Specifications

- **active array size:** 2592 x 1944
- **power supply:**
  - **core:** 1.5 V ±5% (with embedded 1.5 V regulator)
  - **analog:** 2.6 - 3.0 V (2.8 V typical)
  - **I/O:** 1.8 V / 2.8 V
- **power requirements:**
  - **active:** 140 mA
  - **standby:** 20 µA
- **temperature range:**
  - **operating:** -30°C to 70°C junction temperature
  - **stable image:** 0°C to 50°C junction temperature
- **output formats:** 8/10-bit RAW RGB output
- **lens size:** 1/4"
- **lens chief ray angle:** 24°
- **input clock frequency:** 6 - 27 MHz
- **shutter:** rolling shutter / frame exposure
- **maximum image transfer rate:**
  - **QSXGA (2592x1944):** 15 fps
  - **1080p:** 30 fps
  - **1280 x 960:** 45 fps
  - **720p:** 60 fps
  - **VGA (640x480):** 90 fps
  - **QVGA (320x240):** 120 fps
- **sensitivity:** 600 mV/lux-sec
- **maximum exposure interval:** 1964 x t_{ROW}
- **max S/N ratio:** 36 dB
- **dynamic range:** 68 dB @ 8x gain
- **pixel size:** 1.4 µm x 1.4 µm
- **dark current:** 8 mV/sec @ 60°C junction temperature
- **image area:** 3673.6 µm x 2738.4 µm
- **package dimensions:**
  - **CSP3:** 5985 µm x 5835 µm
  - **COB:** 6000 µm x 5850 µm

Functional Block Diagram

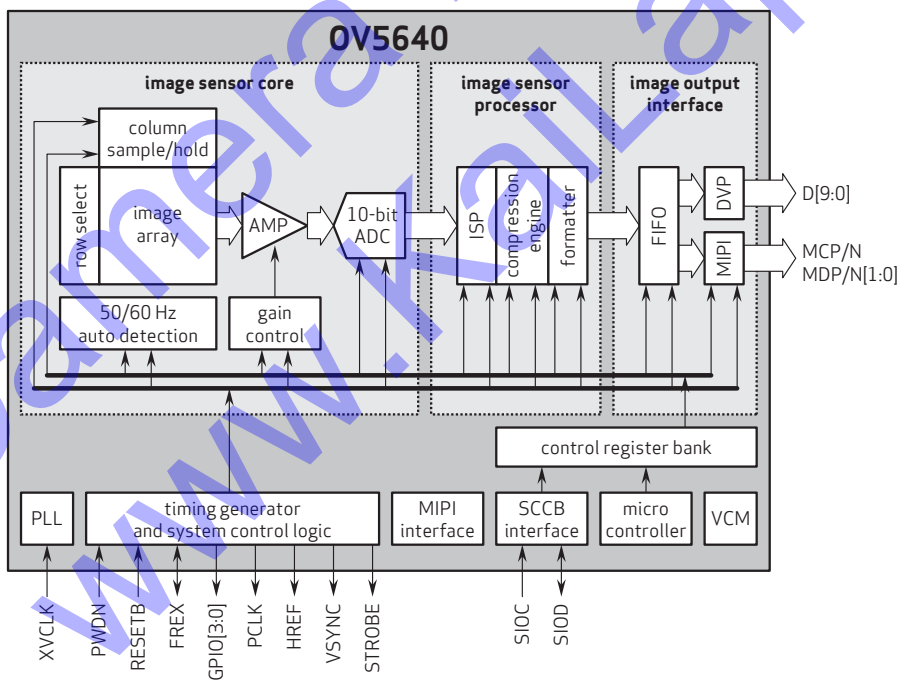

4275 Burton Drive
Santa Clara, CA 95054
USA

Tel: + 1 408 567 3000
Fax: + 1 408 567 3001
www.ovt.com

OmniVision reserves the right to make changes to their products or to discontinue any product or service without further notice. OmniVision, the OmniVision logo and OmniPixel are registered trademarks of OmniVision Technologies, Inc. OmniBSI is a trademark of OmniVision Technologies, Inc. All other trademarks are the property of their respective owners.

Version 1.2, February, 2011

Camera Module Factory
www.KaiLapTech.com